LEGEND	
X	WALL LABELLING
	VENTILATION AIR INLET IN THE WALL (90x170mm)
	VENTILATION AIR OUTLET IN THE WALL (90x170 mm)
	BACKREST
	UPPER BENCH
	LOWER BENCH
	BENCH SKIRT STATIONARY
	LED STRIP

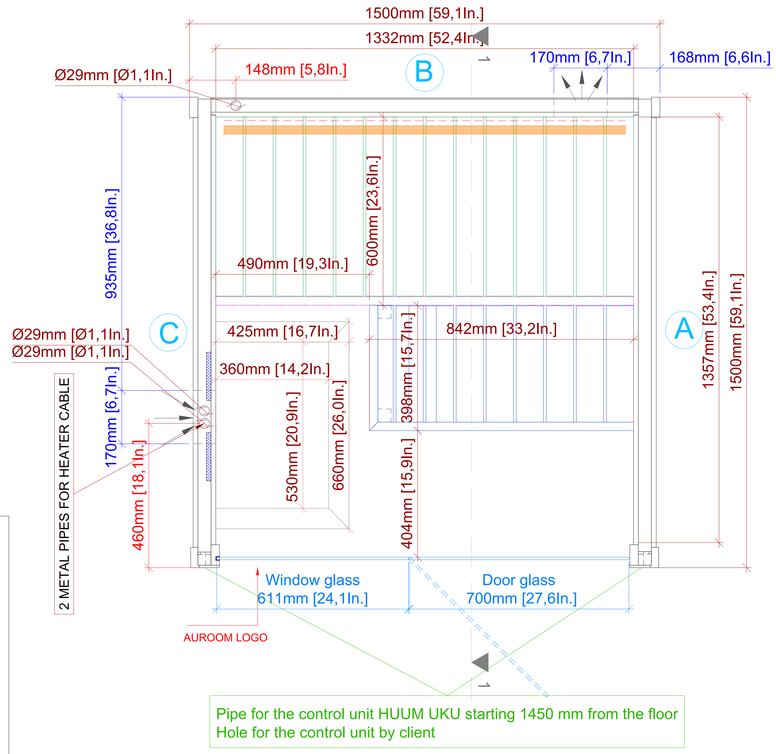

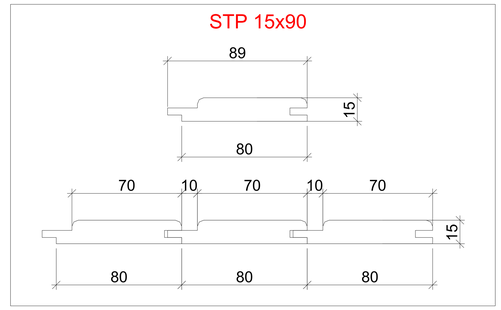

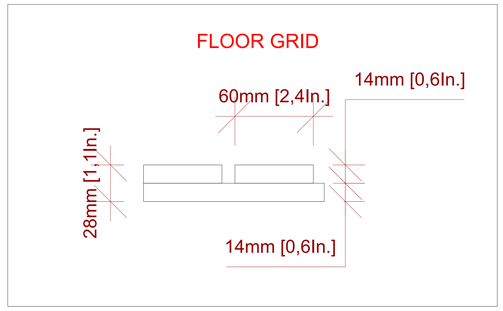

GLASS-GLASS HINGES

PREMIUM HANDLE

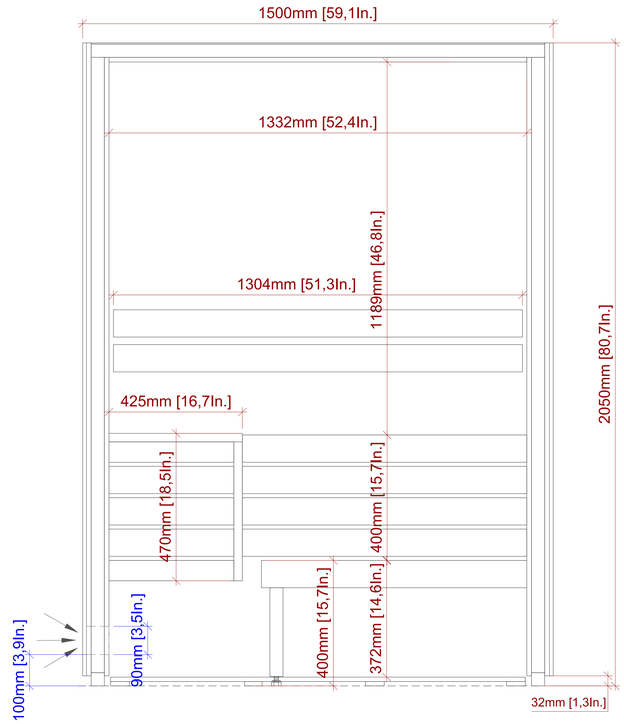

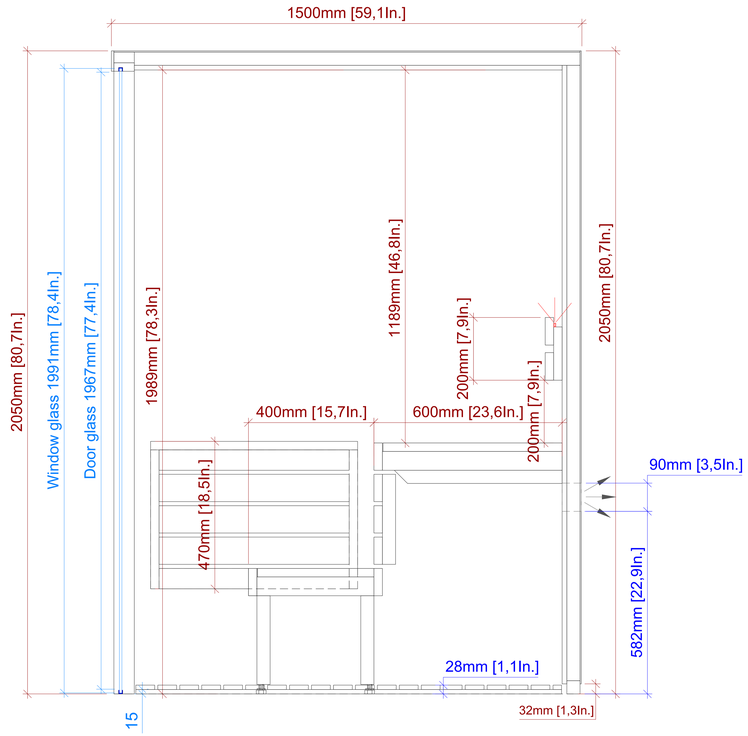

TECHNICAL INFORMATION

BASE FRAME	WOODEN BASE FRAME
INSIDE WALL & CEILING PROFILE	HORIZONTAL STP 15x90 THERMO ASPEN **(WAXED)**
OUTSIDE WALL PROFILE/MATERIAL	HORIZONTAL STP 15x90 THERMO ASPEN (A,C) **(WAXED)** 4 MM PLYWOOD (B)
INTERIOR MATERIAL	THERMO ASPEN **(WAXED)**
INTERIOR (PRIVATE USE)	BENCHES, BACK GRID, FLOOR GRID (FULL FLOOR), HEATER GUARD
SAUNA DOOR/WINDOW	CLEAR 8 mm TEMPERED
HINGES	2x HINGES
HANDLE	PREMIUM HANDLE (WOOD / METAL)
LIGHTING	LED STRIPS BEHIND THE BACKREST (UP) + REMOTE CONTROL
HEATER AND CONTROL UNIT	BY CLIENT
CONTROL UNIT	BY CLIENT
AUROOM ACCESSORIES	BUCKET AND LADLE, THERMO-HYGROMETER, SAND TIMER, SAUNA HAT, SAUNA PILLOW, AROMA SET
PALLET LOADING	HORIZONTALLY PACKED

Project name:	150x150 cm (60x60x81) "CALA GLASS THERMO ASPEN L"	Scale –	Version 2 (27.03.2023)
Client	US		
AUROOM	Drawing	Top view/Cross-section 1-1	
	Remark	Confirmation	
	Designer	K.R	
	Date	Ready for production –	Loading –