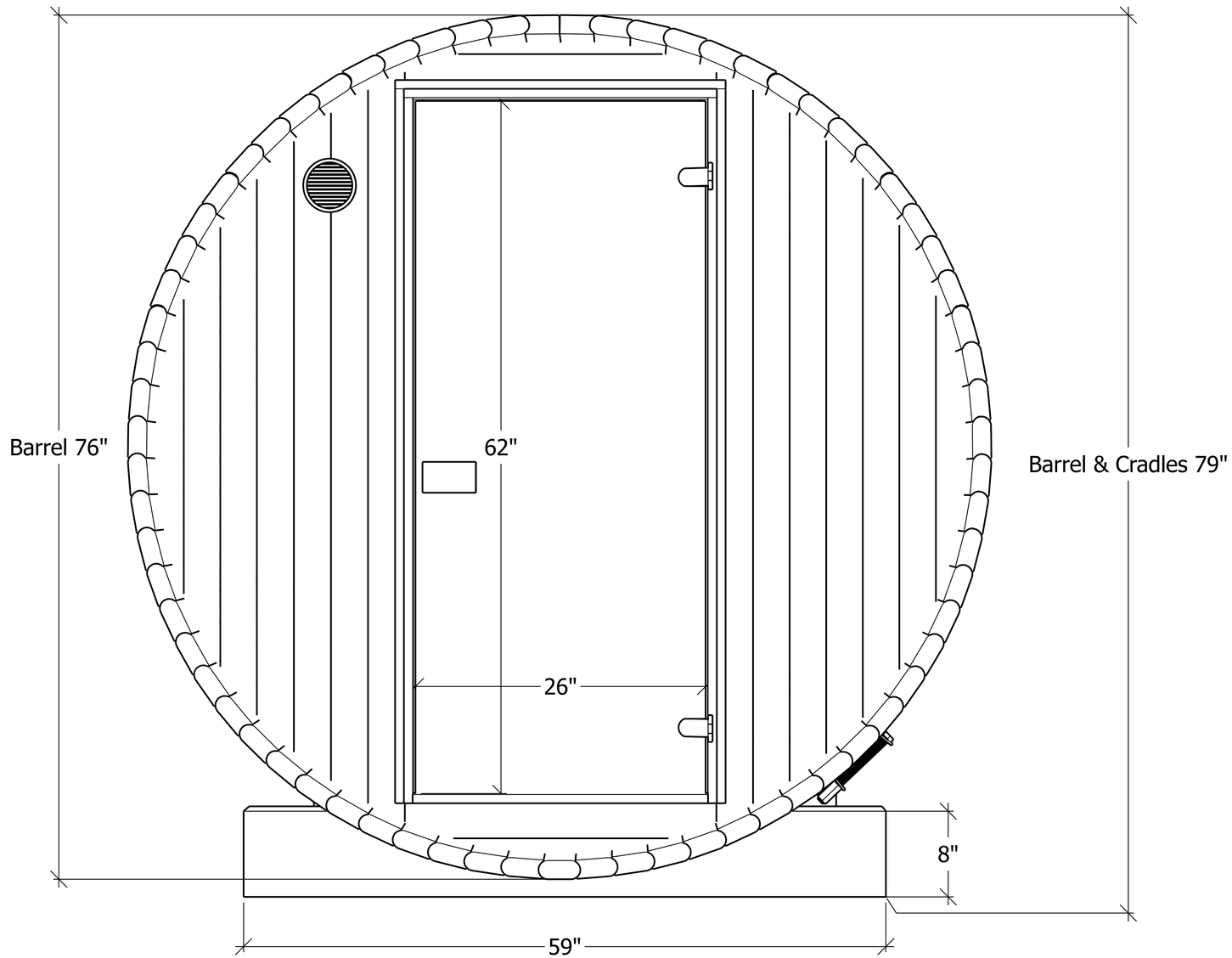
Barrel 76"
62"
Barrel & Cradles 79"
26"
8"
59"